MEAN WELL

200W Single Output Switching Power Supply

LRS-200 series

IS 13252(Part 1):2010/ IEC 60950-1:2005
R33100 RoHS
R-41179035

AS/NZS62368-1 TP TC004 IEC62368-1 UL62368-1 (Note.9) (for LRS-200-12/24 only)

ECO Automate Industrial Security Network Telecom

Features

- AC input range selectable by switch
- Withstand 300VAC surge input for 5 second
- Protections: Short circuit / Overload / Over voltage / Over temperature
- Cooling by free air convection
- 1U low profile
- Withstand 5G vibration test
- LED indicator for power on
- No load power consumption<0.75W
- 100% full load burn-in test
- High operating temperature up to 70℃
- Operating altitude up to 5000 meters (Note.8)
- High efficiency, long life and high reliability
- 3 years warranty

Applications

- Industrial automation machinery
- Industrial control system
- Mechanical and electrical equipment
- Electronic instruments, equipments or apparatus

Description

LRS-200 series is a 200W single-output enclosed type power supply with 30mm of low profile design. Adopting the input of 115VAC or 230VAC (select by switch), the entire series provides an output voltage line of 3.3V, 4.2V, 5V, 12V, 15V, 24V, 36V and 48V.

In addition to the high efficiency up to 90%, the design of metallic mesh case enhances the heat dissipation of LRS-200 that the whole series operates from -25℃ through 70℃ under air convection without a fan. Delivering an extremely low no load power consumption (less than 0.75W), it allows the end system to easily meet the worldwide energy requirement. LRS-200 has the complete protection functions and 5G anti-vibration capability; it is complied with the international safety regulations such as IEC/UL 62368-1. LRS-200 series serves as a high price-to-performance power supply solution for various industrial applications.

Model Encoding

LRS - 200 - 3.3

- 3.3 — Output voltage
- 200 — Output power
- LRS — Series name

SPECIFICATION

MODEL		LRS-200-3.3	LRS-200-4.2	LRS-200-5	LRS-200-12	LRS-200-15	LRS-200-24	LRS-200-36	LRS-200-48
OUTPUT	DC VOLTAGE	3.3V	4.2V	5V	12V	15V	24V	36V	48V
	RATED CURRENT	40A	40A	40A	17A	14A	8.8A	5.9A	4.4A
	CURRENT RANGE	0 ~ 40A	0 ~ 40A	0 ~ 40A	0 ~ 17A	0 ~ 14A	0 ~ 8.8A	0 ~ 5.9A	0 ~ 4.4A
	RATED POWER	132W	168W	200W	204W	210W	211.2W	212.4W	211.2W
	RIPPLE & NOISE (max.) Note.2	150mVp-p	150mVp-p	150mVp-p	150mVp-p	150mVp-p	150mVp-p	200mVp-p	200mVp-p
	VOLTAGE ADJ. RANGE	2.97 ~ 3.6V	3.6 ~ 4.4V	4.5 ~ 5.5V	10.2 ~ 13.8V	13.5 ~ 18V	21.6 ~ 28.8V	32.4 ~ 39.6V	43.2 ~ 52.8V
	VOLTAGE TOLERANCE Note.3	±3.0%	±4.0%	±3.0%	±1.5%	±1.0%	±1.0%	±1.0%	±1.0%
	LINE REGULATION Note.4	±0.5%	±0.5%	±0.5%	±0.5%	±0.5%	±0.5%	±0.5%	±0.5%
	LOAD REGULATION Note.5	±2.5%	±2.5%	±2.0%	±1.0%	±0.5%	±0.5%	±0.5%	±0.5%
	SETUP, RISE TIME	1300ms, 50ms/230VAC 1300ms,50ms/115VAC at full load							
	HOLD UP TIME (Typ.)	16ms/230VAC 12ms/115VAC at full load							
INPUT	VOLTAGE RANGE	90 ~ 132VAC / 180 ~ 264VAC by switch 240 ~ 370VDC (switch on 230VAC)							
	FREQUENCY RANGE	47 ~ 63Hz							
	EFFICIENCY (Typ.)	83%	86%	87%	87.5%	88%	89.5%	89.5%	90%
	AC CURRENT (Typ.)	4A/115VAC 2.2A/230VAC							
	INRUSH CURRENT (Typ.)	COLD STAR 60A/115VAC 60A/230VAC							
	LEAKAGE CURRENT	<2mA / 240VAC							
PROTECTION	OVER LOAD	110 ~ 140% rated output power							
		3.3~36V Hiccup mode, recovers automatically after fault condition is removed. 48V Shut down and latch off o/p voltage, re-power on to recover.							
	OVER VOLTAGE	3.8 ~ 4.45V	4.6 ~ 5.4V	5.75 ~ 6.75V	13.8 ~ 16.2V	18 ~ 21V	28.8 ~ 33.6V	41.4 ~ 46.8V	55.2 ~ 64.8V
		3.3~36V Hiccup mode, recovers automatically after fault condition is removed. 48V Shut down and latch off o/p voltage, re-power on to recover.							
	OVER TEMPERATURE	3.3~36V Hiccup mode, recovers automatically after fault condition is removed. 48V Shut down and latch off o/p voltage, re-power on to recover.							
ENVIRONMENT	WORKING TEMP.	-25 ~ +70℃ (Refer to "Derating Curve")							
	WORKING HUMIDITY	20 ~ 90% RH non-condensing							
	STORAGE TEMP., HUMIDITY	-40 ~ +85℃, 10 ~ 95% RH							
	TEMP. COEFFICIENT	±0.03%/℃ (0 ~ 50℃)							
	VIBRATION	10 ~ 500Hz, 5G 10min./1cycle, 60min. each along X, Y, Z axes							
SAFETY	SAFETY STANDARDS	IEC/UL 62368-1, BSMI CNS14336-1, BS EN/EN60335-1,EAC TP TC 004, KC K60950-1(for LRS-200-12/24 only), BIS IS13252(Part1): 2010/IEC 60950-1: 2005, AS/NZS62368.1 approved; Design refer to BS EN/EN62368-1							
	WITHSTAND VOLTAGE	I/P-O/P:3KVAC I/P-FG:2KVAC O/P-FG:0.5KVAC							
	ISOLATION RESISTANCE	I/P-O/P, I/P-FG, O/P-FG:100M Ohms / 500VDC / 25℃/ 70% RH							
	EMC EMISSION	Compliance to BSMI CNS13438, EAC TP TC 020,KC KN32,KN35(for LRS-200-12/24 only)							
	EMC IMMUNITY	Compliance to EAC TP TC 020,KC KN32,KN35(for LRS-200-12/24 only)							
OTHERS	MTBF	347.5K hrs min. MIL-HDBK-217F (25℃)							
	DIMENSION	215*115*30mm (L*W*H)							
	PACKING	0.66Kg; 15pcs/10.9Kg/0.78CUFT							

NOTE

1. All parameters NOT specially mentioned are measured at 230VAC input, rated load and 25℃ of ambient temperature.
2. Ripple & noise are measured at 20MHz of bandwidth by using a 12" twisted pair-wire terminated with a 0.1uf & 47uf parallel capacitor.
3. Tolerance : includes set up tolerance, line regulation and load regulation.
4. Line regulation is measured from low line to high line at rated load.
5. Load regulation is measured from 0% to 100% rated load.
6. Length of set up time is measured at cold first start. Turning ON/OFF the power supply very quickly may lead to increase of the set up time.
7. The 150% peak load capability is built in for up to 1 second for 12~48V.LRS-200 will enter hiccup mode if the peak load is delivered for over 1 second and will recover once it resumes to the rated current level(115VAC/230VAC).
8. The ambient temperature derating of 5℃/1000m is needed for operating altitude greater than 2000m(6500ft).
9. This power supply does not meet the harmonic current requirements outlined by BS EN/EN61000-3-2. Please do not use this power supply under the following conditions:
   a) the end-devices is used within the European Union, and
   b) the end-devices is connected to public mains supply with 220Vac or greater rated nominal voltage, and
   c) the power supply is:
      - installed in end-devices with average or continuous input power greater than 75W, or
      - belong to part of a lighting system

   Exception:
   Power supplies used within the following end-devices do not need to fulfill BS EN/EN61000-3-2
   a) professional equipment with a total rated input power greater than 1000W;
   b) symmetrically controlled heating elements with a rated power less than or equal to 200W

※ Product Liability Disclaimer : For detailed information, please refer to https://www.meanwell.com/serviceDisclaimer.aspx

Block Diagram

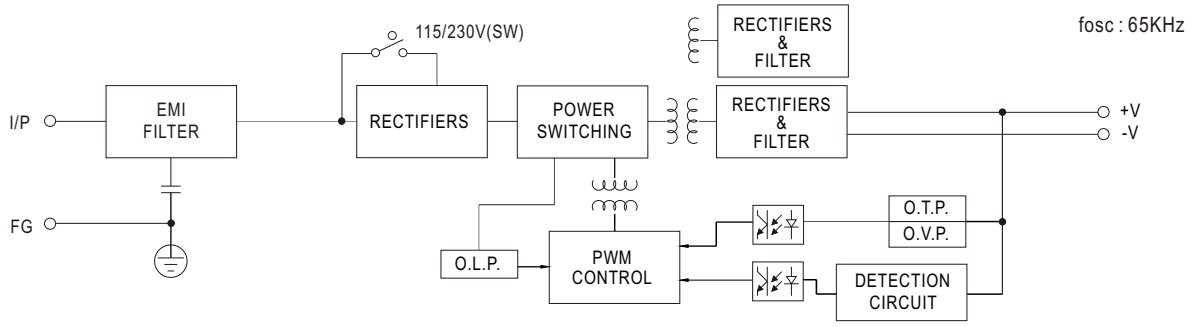

Derating Curve

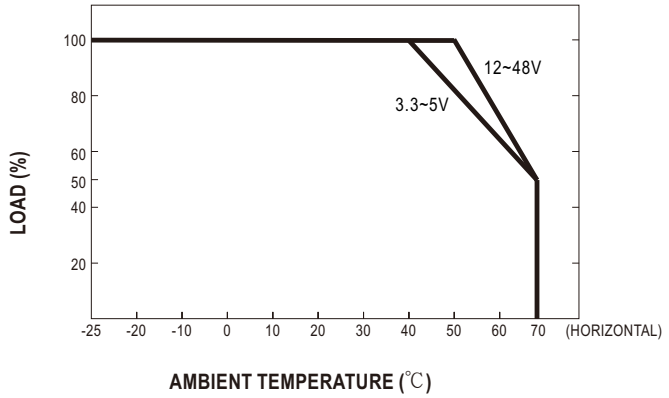

Static Characteristics

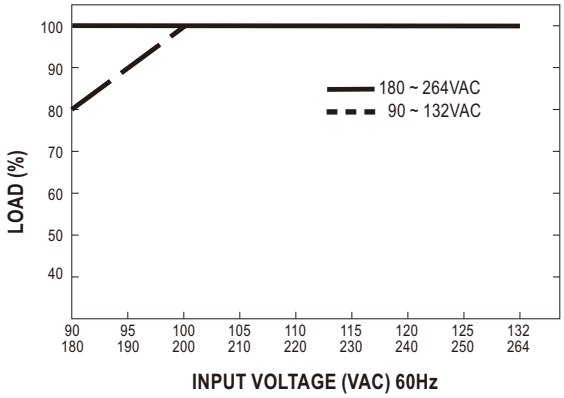

MEAN WELL

200W Single Output Switching Power Supply

LRS-200 series

■ Mechanical Specification

Case No. 207 Unit:mm

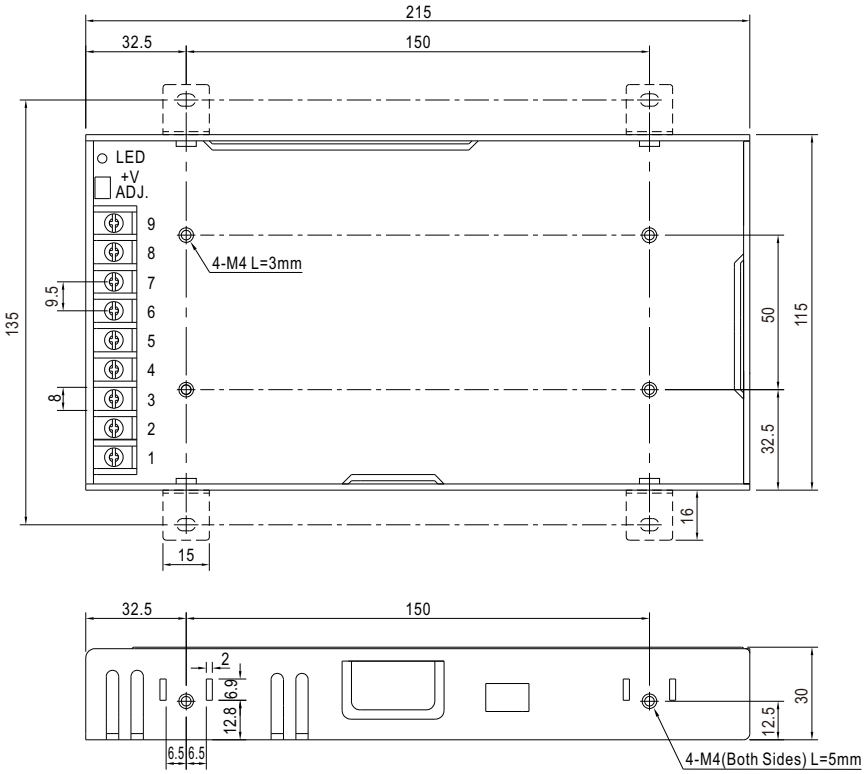

Terminal Pin No. Assignment :

Pin No.	Assignment	Pin No.	Assignment
1	AC/L	4~6	DC OUTPUT -V
2	AC/N	7~9	DC OUTPUT +V
3	FG ⏚		

■ Installation Manual

Please refer to : http://www.meanwell.com/manual.html

Contact Us:
E-mail Address:
Oyostepper.com@gmail.com
Telephone Number: +86-023-68438829
Our website:https://www.oyostepper.com/